valco baby

rover

sit or stand toddler ride-on board

user manual

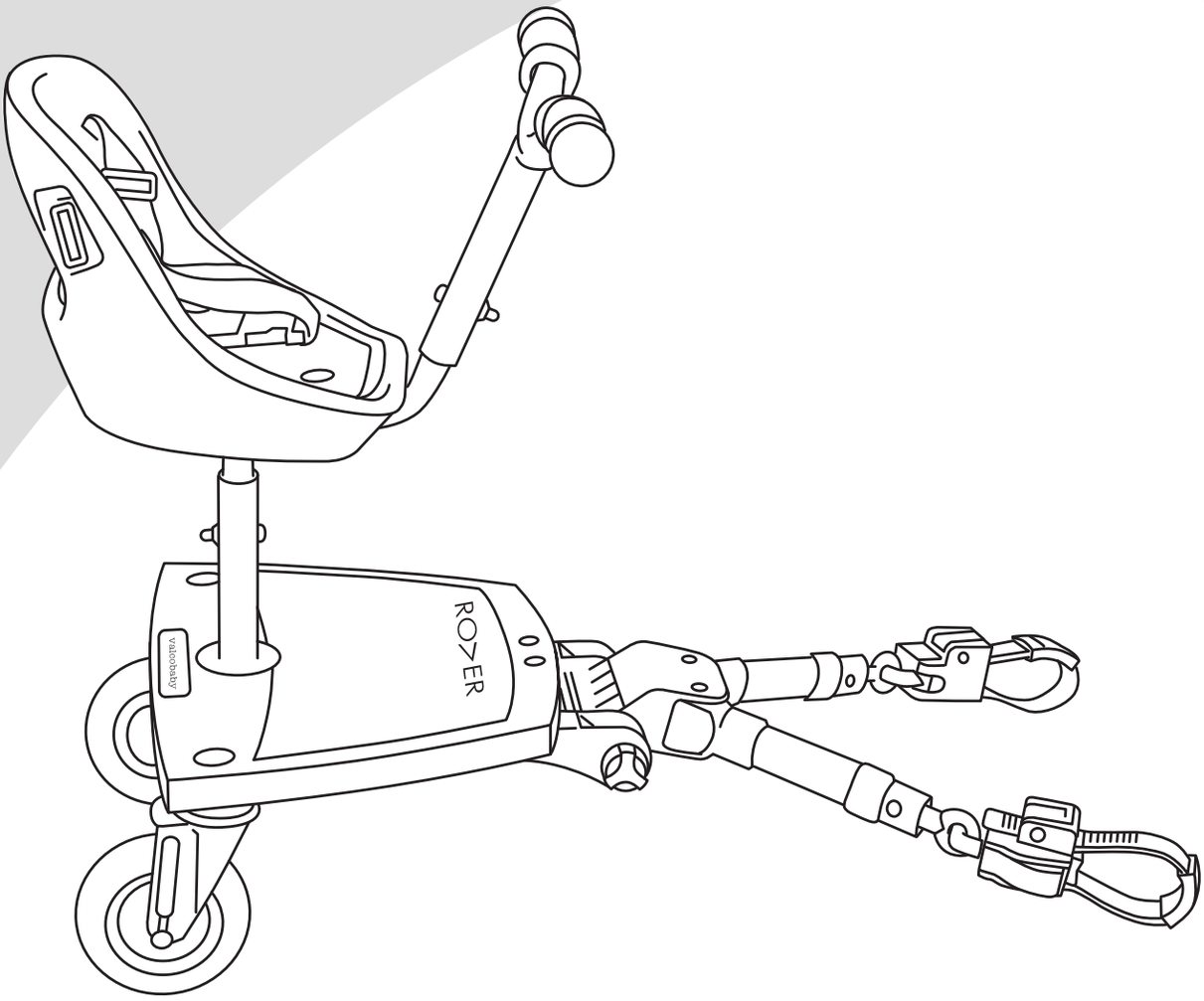

Important – Keep these instructions for future reference

FURTHER INFORMATION:
valcobaby.com.au

Copyright VE 2020 vs11112020

TESTED
TABLE 1 OF
AS/NZS 2088:2013

Find us on:
@valcobabyaus

Thank you for purchasing a quality VALCO BABY product. Please read and follow the instructions outlined in this guide carefully. Familiarise yourself with the construction and safety features. Be sure that you understand all the warnings and safety guidelines before use.

⚠ Important: Please read the following instructions carefully before assembling this product. Keep these instructions for future reference. Familiarise yourself with the warnings and guidelines.

DISCLAIMER: Due to our policy of continuous product development, this product is constantly evolving. It is possible that some features or procedures outlined here have changed since this document was written. If you are unsure of any procedure shown here, please contact us via email at **info@valiantbrands.com.au** to obtain the most up to date information before use. Include the batch number and model number, which can be found on a sticker on the frame.

All pictures and diagrams herein are provided for illustration purposes only. Actual product, colour or fabric may vary. VALCO BABY reserves the right to modify or alter any specification or colour without notice or obligation to modify any product previously purchased

IMPORTANT WARNING: Always refer to the Warnings page when you see this symbol
AVERTISSEMENT IMPORTANT : Référez-vous toujours à la page avertissements lorsque vous voyez ce symbole.
AVVISO IMPORTANTE: fare sempre riferimento a questa pagina quando vedete questi simboli
AVISO IMPORTANTE: Siempre ir a la pagina 'Avisos" cuando vee a estas iconas.
DŮLEŽITÉ UPOZORNĚNÍ: Tento symbol uvedený v tomto návodu označuje "Varování".
ВАЖНОЕ ПРЕДУПРЕЖДЕНИЕ: Всегда обращайтесь на страницу предупреждения, когда вы видите этот символ
WICHTIGER HINWEIS: Immer auf die Warnungen Seite verweisen, wenn Sie dieses Symbol sehen.
! DÔLEŽITÉ UPOZORNENIE: Tento symbol uvedený v tomto návode označuje: „Varovanie“.
WAŻNE OSTRZEŻENIE: ZAWSZE ODWOŁAJ SIĘ DO LISTY OSTRZEŻEŃ KIEDY WIDZISZ TEN SYMBOL

NEVER USE ON STAIRS OR ESCALATORS
- Ne l'utilisez jamais dans les marches ni les escaliers mécaniques.
- Non utilizzare su scale o scale mobili.
- Nunca utilizar este producto sobra las escaleras o las escaleras o las escaleras mecánica.
- Nikdy nepoužívejte na schodech nebo eskalátorech.
- Никогда не используйте на лестнице или эскалаторе.
- Nie auf Treppen oder esculators verwenden.
- Nikdy nepoužívajte na schodoch alebo eskalátoroch.
- NIE NALEŻY ZJEŻDŻAĆ/WJEZDŻAĆ WÓZKIEM PO SCHODACH I SCHODACH RUCHOMYCH

ANY LOAD ATTACHED TO HANDLES, BACK OR SIDES WILL AFFECT STABILITY
- Ne surchargez pas les poignées, l'arrière ou les côtés.
- Ogni peso caricato al manico o ai lati puo' destabilizzare il passenggino.
- Cualquier carga fijada al manillar y/o a la parte trasera del respaldo y/o a los laterales del vehículo afecta a la estabilidad de éste.
- Jakákoliv taška nebo předmět, zavěšený na rukojeť, nebo jinou část kočárku, může ohrozit jeho stabilitu.
- Любой груз прикрепленный к ручке с любой из сторон вылияет на устойчивость коляски.
- Befestigte Lasten Griffe, Rücken oder an den Seiten wird die Stabilität auswirken.
- Akákoľvek taška alebo predmet, zavesený na rukoväti alebo inej časti kočíka, môže ohroziť jeho stabilitu.
- KAŻDE DODATKOWE OBCIĄŻENIE ZAWIESZONE NA RĄCZCE, SIEDZISKU LUB Z BOKU MOŻE WPŁYWAĆ NA STABILNOŚĆ WÓZKA.

NEVER LEAVE YOUR CHILD UNATTENDED
- Ne laissez jamais votre enfant sans surveillance.
- Non lascire il bambino incustodito.
- No dejar nunca al niño desatendido.
- Nikdy nenechávejte své děti bez dozoru.
- Никогда не оставляйте детей без присмотра.
- Lassen Sie Kinder nicht unbeaufsichtigt
- Nikdy nenechávajte dieťa bez dozoru!
- NIGDY NIE POZOSTAWIAJ DZIECKA BEZ OPIEKI

THIS PRODUCT IS NOT SUITABLE FOR RUNNING OR SKATING
- Ce produit ne convient pas pour courir ou patiner.
- Questo prodotto non e' adattor per correre o pattinare.
- Este producto no es adecuado para correr o patinar.
- Tento produkt není vhodný pro běh nebo bruslení.
- Продукт не предназначен для использования во время бега или катания на роликах или скейте.
- Dieses Produkt ist nicht für den Betrieb oder Skaten geeignet.
- Tento produkt nie je vhodný na beh alebo korčuľovanie.
- PRODUKT NIE JEST PRZEZNACZONY DO JAZDY NA ROLKACH ANI DO BIEGANIA.

TO AVOID INJURY ENSURE THAT YOUR CHILD IS KEPT AWAY WHEN UNFOLDING AND FOLDING THIS PRODUCT.
- Pour éviter les blessures, gardez votre enfant à l'écart quand vous pliez ou dépliez ce produit.
- Assicurarsi che i bambini siano all distanza de sicurezz dalle parti mobili mentre operate con i passeggino per evitare ferite.
- Para evitar lesiones, asegúrese de que el niño se mantiene alejado duranteel desplegado yel plegado de este producto.
- Při skládání nebo rozkládání kočárku se vždy ubezpečte, že je vaše dítě v bezpečné vzdálenosti, aby nemohlo dojít k úrazu.
- Во избежание травм убедитесь, что ваш ребенок находится вдали при раскладывании и складывания этого продукта.
- Um Verletzungen zu vermeiden, dass Ihr Kind sicher entfernt wird, wenn Aus- und Einklappen dieses Produkt gehalten.
- Pri skladaní alebo rozkladaní kočíka sa vždy ubezpečte, že je vaše dieťa v bezpečnej vzdialenosti, aby nemohlo dôjsť k úrazu.

PODCZAS CZYNNOŚCI SKŁADANIA I ROZKŁADANIA WÓZKA NALEŻY UPEWNIĆ SIĘ,
- CZY DZIECKO ZNAJDUJE SIĘ W BEZPIECZNEJ ODLEGŁOŚCI.

ALWAYS USE THE RESTRAINT SYSTEM
- Utilisez toujours le harnais.
- Utilizzare sempre le cintured di sicurezza.
- Siempre utilizar el sistema de retencion.
- Vždy používejte bezpečnostní pásy..
- Всегда используйте ремень безопасности.
- Verwenden Sie immer das Rückhaltesystem.
- Vždy používajte 5-bodový bezpečnostný pás pre bezpečnosť dieťaťa!
- ZAWSZE UŻYWAJ SYSTEMU ZABEZPIECZEŃ

ALWAYS USE THE TETHER STRAP
- Utilisez toujours la dragonne.
- Usare sempre la cinghia di ritenuta a polso
- Siempre utiliazar la correa de seguridad en la muneca
- Vždy používejte bezpečnostní pásek.
- Всегда используйте страховочный ремень.
- Verwenden Sie stets den Haltegurt
- Vždy používajte bezpečnostnú pásku.
- ZAWSZE UŻYWAJ PASKA ZABEZPIECZAJĄCEGO NA NADGARSTEK

ENSURE THAT ALL LOCKING MECHANISMS ARE ENGAGED BEFORE USE
- Assurez-vous que tous les mécanismes de verrouillage sont enclenchés avant l'usage.
- Assicurarsi sempre che tutti i sistemi de sicurezza e bloccaggio siano ben fissati prema dell'uso.
- Asegurarse de que todos los dispositivos de cierre están ensamblados antes del uso.
- Před použitím se vždy ujistěte, že jsou všechny pojistky řádně zajištěny.
- Убедитесь, что все застежки и пряжки надежно зафиксированы.
- Stellen Sie sicher, dass alle Verriegelungen vor Gebrauch eingerastet sind.
- Pred používaním sa presvedčite, či sú všetky blokovacie zariadenia zapnuté!
- PRZED UŻYCIEM WÓZKA UPEWNIJ SIĘ, ŻE WSZYSTKIE MECHANIZMY SKŁADANIA ZOSTAŁY ZABLOKOWANE

valcobaby.com.au

OVERVIEW

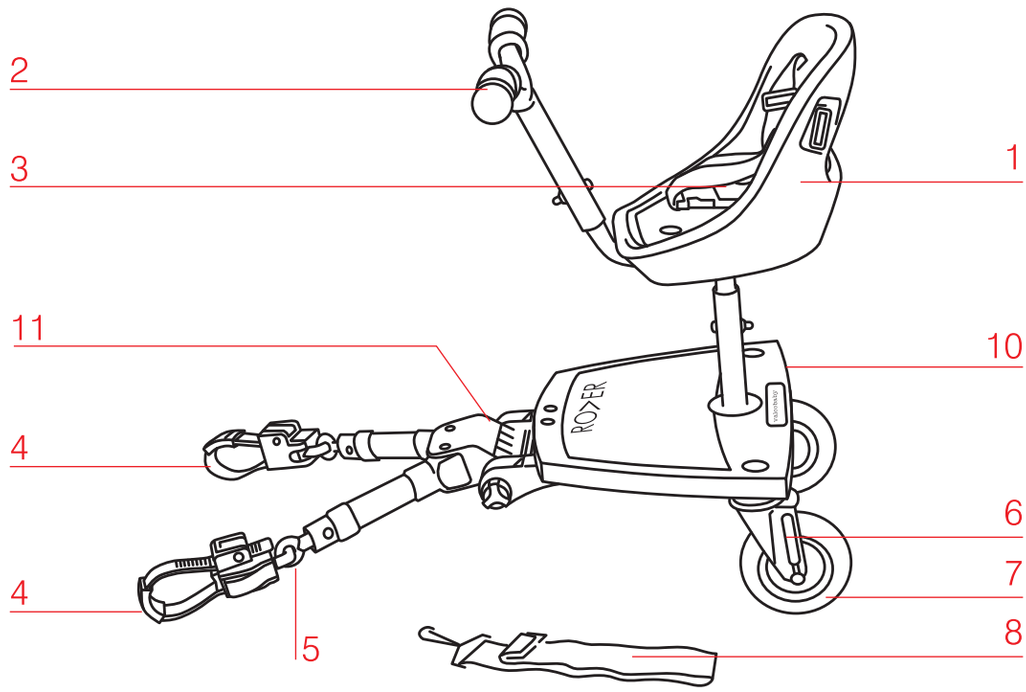

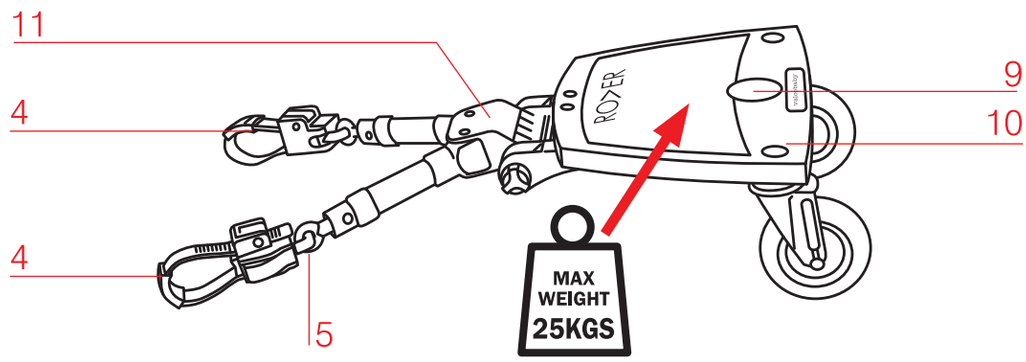

1	2	3	4	5	6	7
SEAT	HANDLE	HARNESS	UNIVERSAL CONNECTOR	QUICK RELEASE	SUSPENSION	WHEELS

8	9	10	11
STORAGE STRAP	PLUG	STANDING/ FOOT BOARD	ADJUSTABLE HEIGHT/WIDTH ARMS

TO OPEN

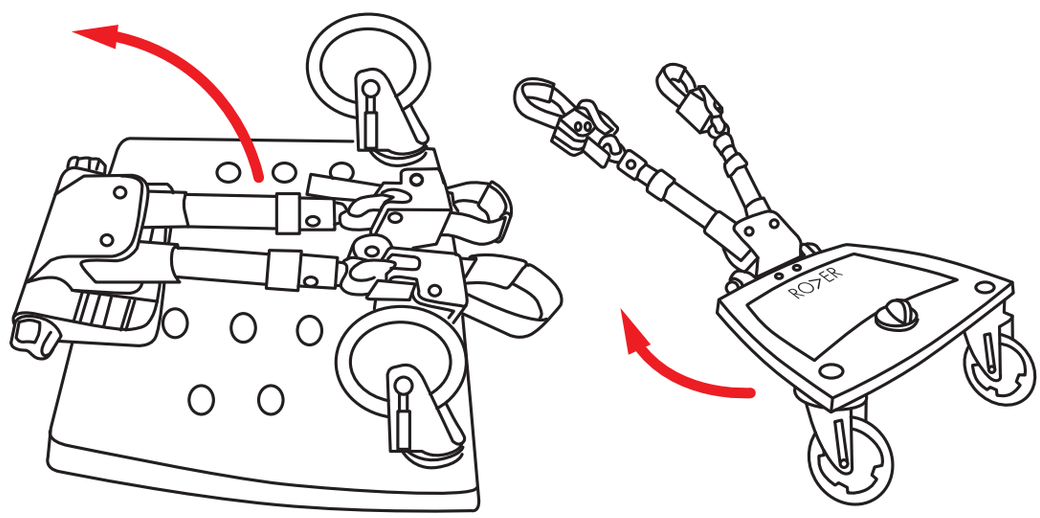

ATTACH

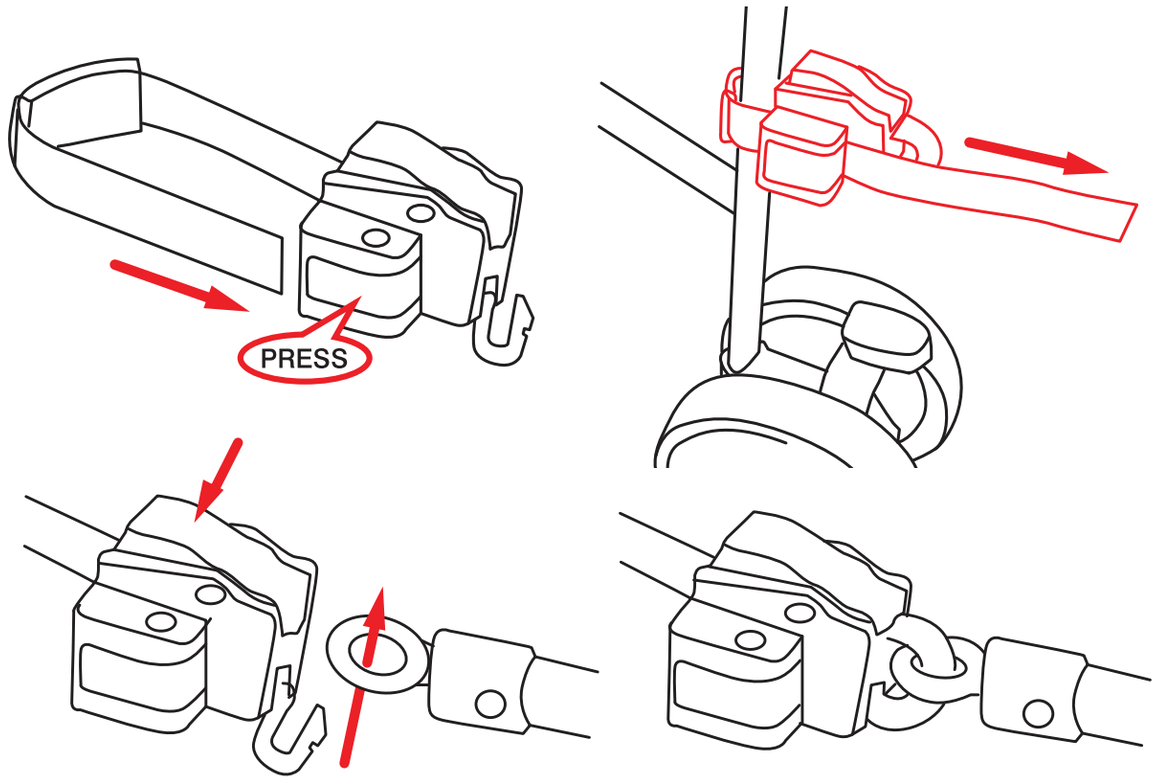

ADJUST LENGTH

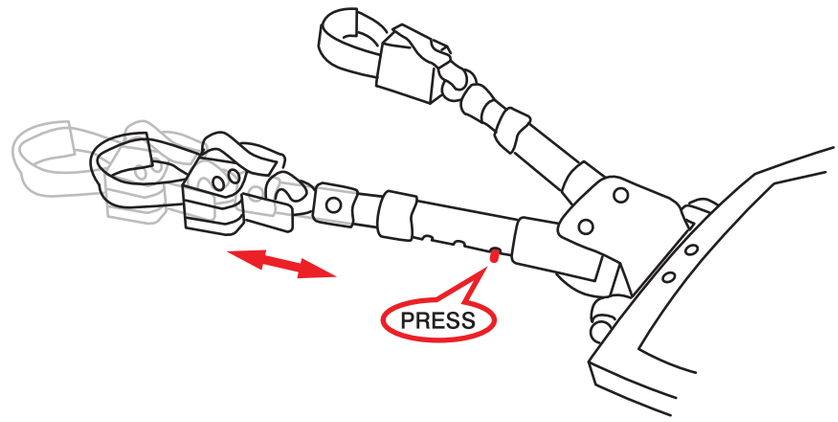

ADJUST HEIGHT

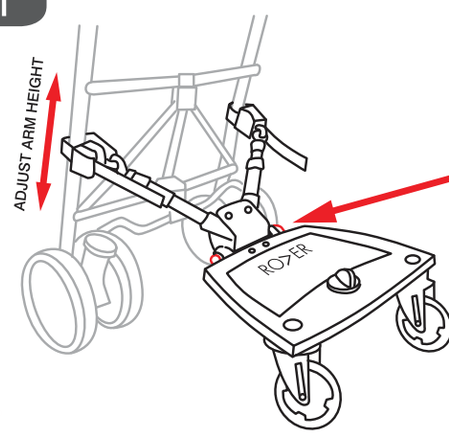

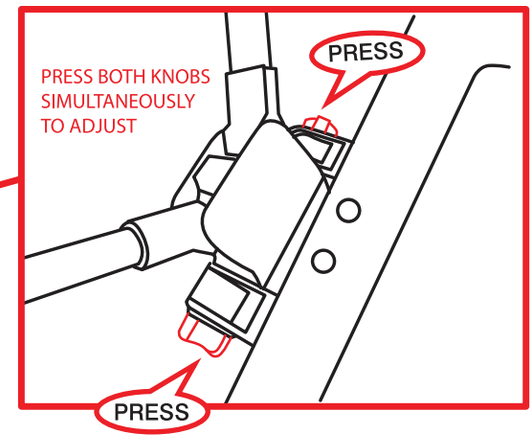

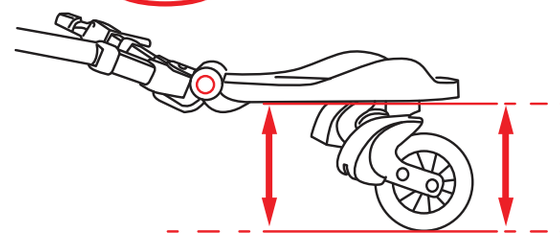

ALWAYS KEEP THE PLATFORM PARRALEL TO THE GROUND

STORAGE STRAP

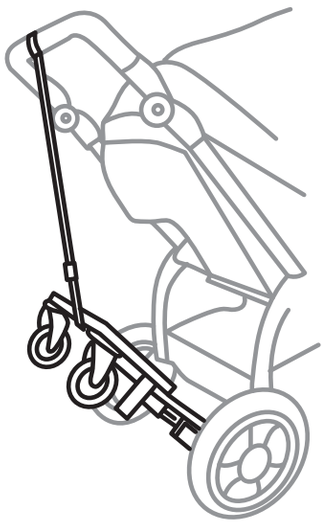

IMPORTANT WARNING:
Always be aware of the risk of your stroller tipping or becoming unstable when using the Storage Strap. Do not use if the stroller stability is adversely affected.

OPTIONAL GRAB STRAPS

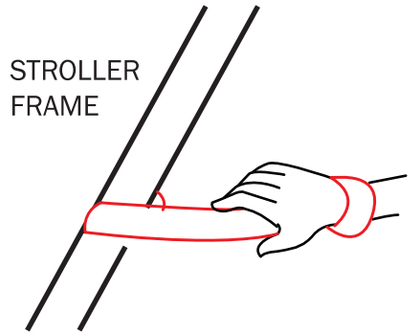

PLEASE READ THIS WARNING CAREFULLY BEFORE USING YOUR RIDE-ON

Please ensure that your child has access to mantain a continuous and firm grasp on a apart of the structure of your pram or stroller (such as the handle tubing) with each hand while riding in standing mode. If not, please attach the two grab straps provided to such a structure and make sure that they will be accessible instead.

SEAT

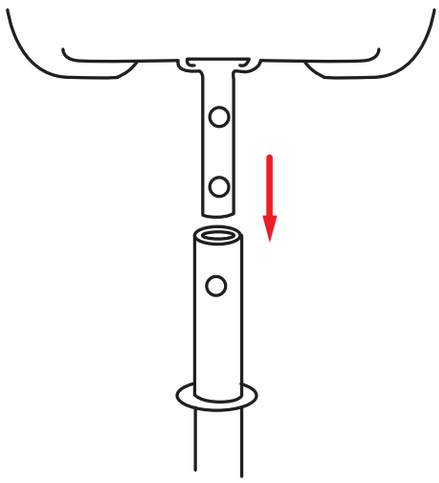

ENSURE THAT ALL LOCKING MECHANISMS ARE ENGAGED BEFORE USE.
ENSURE THAT ALL SCREWS ARE TIGHT AND FULLY ENGAGED BEFORE USE.

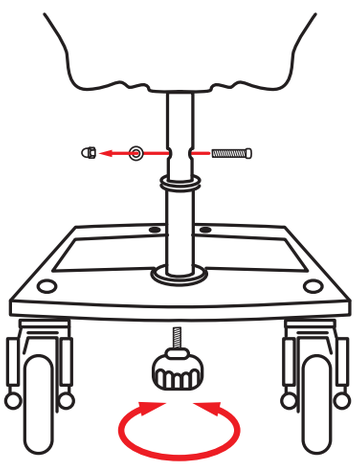

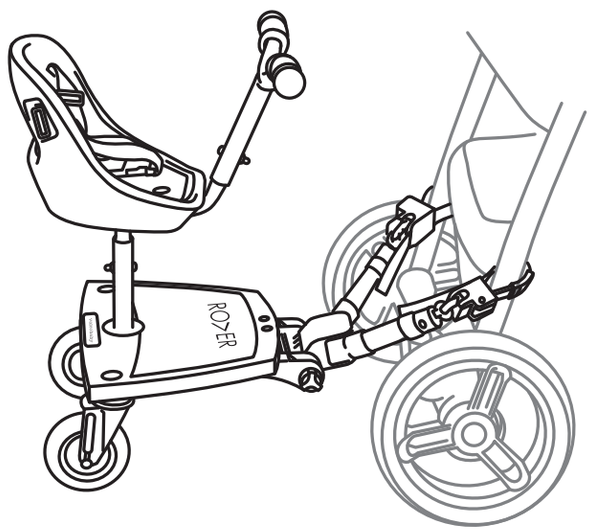

⚠WARNING

- **THE USE OF THE ROVER IS ONLY RECOMMENDED IF THERE IS A CHILD IN THE PRAM BODY, OR IF THE PRAM HANDLES ARE FIRMLY SECURED BY AN ADULT**
- **THE PUSHING HANDLES OF THE PRAM MUST BE HELD TIGHTLY WITH BOTH HANDS BY AN ADULT AT ALL TIMES.**
- **THE ROVER IS NOT A TOY. NEVER LEAVE YOUR CHILD UNATTENDED.**
- **THE ROVER MUST NOT BE USED IF YOU GO JOGGING WITH THE PRAM.**
- **THE ROVER IS DESIGNED FOR CHILDREN UPWARDS OF 15 MONTHS AND UP TO A MAXIMUM WEIGHT OF 25 KG. IN ORDER TO GUARANTEE THE SAFETY AND FUNCTIONALITY OF THE DEVICE, AVOID ANY OVERLOADING AND UNDER NO CIRCUMSTANCES USE IT FOR TRANSPORTING OTHER ITEMS.**
- **NEVER USE THE THE ROVER WITH A CHILD ON IT WHILE CROSSING ANY ROAD**

Remember, your child's safety is your responsibility...

- NEVER USE ON STAIRS OR ESCALATORS.
- ALWAYS USE THE TETHER STRAP WHEN THE STROLLER IS IN USE.
- THE CORRECT USE AND MAINTENANCE OF THIS VEHICLE ARE ESSENTIAL.
- BE SURE THAT ALL CLAMPS AND BUCKLES ARE SECURELY FIXED AND IN PLACE BEFORE USE
- WHEN IN THE STROLLER, YOUR CHILD MUST ALWAYS WEAR THE SAFETY HARNESS, CORRECTLY FITTED AND ADJUSTED, AT ALL TIMES.
- DO NOT USE THE ROVER UNTIL YOUR CHILD CAN WALK INDEPENDENTLY AND WITHOUT HELP. CHILDREN MUST ONLY BE TRANSPORTED ON THE FOOT-BOARD IN A STANDING POSITION.
- ALLOW YOUR CHILD TO ALIGHT FROM THE ROVER BEFORE REACHING PAVEMENT EDGES, STAIRS, STEEP PATHS, TIGHT CORNERS, AS WELL AS WHEN MANOEUVRING BACKWARDS.
- THERE MAY BE PRAMS, STROLLERS AND BUGGIES WHICH ARE NOT SUITABLE FOR USE WITH THE ROVER AS THEY CANNOT PROVIDE A SECURE CONNECTING STRUCTURE FOR LATCHING THE ROVER ONTO. PLEASE CONSULT WITH YOUR PRODUCT VENDOR FOR MORE INFORMATION.
- BEFORE STARTING OUT ON EACH JOURNEY, CHECK WHETHER BOARD AND PRAM ARE CORRECTLY CONNECTED TO ONE ANOTHER AND PARALLEL TO THE GROUND.
- ALWAYS CHECK THAT ALL SCREWS AND MOUNTINGS OF THE ROVER ARE SITTING FIRMLY AND THAT ALL PARTS OF THE PRAM ARE OK BEFORE USE.
- ANY ALTERATIONS TO THE ROVER MAY CAUSE THE PRODUCT TO MALFUNCTION AND RENDER IT UNSAFE. IT WILL ALSO VOID ANY WARRANTIES.
- IN THE EVENT OF DAMAGE TO ANY COMPONENT OF THE ROVER DISCONTINUE USE IMMEDIATELY. ONLY USE ORIGINAL REPLACEMENT PARTS PROVIDED BY THE MANUFACTURER.
- THE ROVER IS NOT SUITABLE FOR SNOWY, ICY OR SOFT SURFACES.
- CLEAN THE BOARD AND THE WHEELS FROM TIME TO TIME WITH WARM SOAPY WATER.
- PLEASE KEEP THE PLASTIC PACKING AWAY FROM CHILDREN OR DISPOSE OF IT AS THERE IS A RISK OF SUFFOCATION.
- KEEP THE INSTRUCTION MANUAL CAREFULLY FOR ANY POSSIBLE SUBSEQUENT USERS.
- APART FROM THESE INSTRUCTIONS, PLEASE REFER TO ANY INSTRUCTIONS YOU HAVE RECEIVED FROM YOUR PRAM MANUFACTURER.
- THIS PRODUCT IS INTENDED FOR DOMESTIC USE ONLY. IT IS NOT INTENDED FOR COMMERCIAL USE.
- PLEASE REFER TO YOUR PRAM OR PUSHER'S MANUFACTURER'S INSTRUCTIONS TO ASCERTAIN THE SUITABILITY OF USING THE ROVER WITH YOUR MODEL. SOME PRAMS AND STROLLERS ARE NOT SUITED TO BEARING ADDITIONAL LOADS AND USE OF THE ROVER MAY VOID YOUR PRAM OR STROLLER'S WARRANTY.

MAINTENANCE

- LUBRICATE ALL MOVING PARTS INCLUDING THE WHEELS REGULARLY WITH AN OIL BASED LUBRICANT.
- CHECK THAT NO DIRT OR GRAVEL IS STUCK IN THE WHEELS, SUSPENSION, OR MOVING PARTS BEFORE USE.
- WHEN THE ROVER HAS BEEN USED IN RAINY WEATHER, ALL PARTS SHOULD BE WIPED DRY AFTER USE.
- WHEN CLEANING, USE WARM WATER AND A DRY CLOTH. ALL PARTS SHOULD BE LUBRICATED AGAIN AFTER CLEANING.

IF PROPER MAINTENANCE IS NOT DONE, THE ROVER MAY NOT PERFORM PROPERLY AND PROBLEMS MAY OCCUR.
READ THE INSTRUCTION MANUAL CAREFULLY BEFORE USING THE ROVER AND SAVE FOR FUTURE REFERENCE.
YOUR CHILDS SAFETY MIGHT BE IN JEOPARDY IF THESE INSTRUCTIONS ARE NOT FOLLOWED.
THIS RIDE-ON BOARD IS TESTED WITH COMPACT FOLD STROLLERS, UMBRELLA FOLD STROLLERS, 3 WHEEL STROLLERS, FLAT 4 WHEEL STROLLERS AND SIDE BY SIDE STROLLERS. THIS RIDE-ON BOARD IS APPROVED ACCORDING TO TABLE 1 IN AS/NZS 2088:2013

valcobaby

valcobaby.com.au